Type **TZ21 CNG**

Emergency Fueling Set

for refueling cars from a service vehicle

General

DESCRIPTION

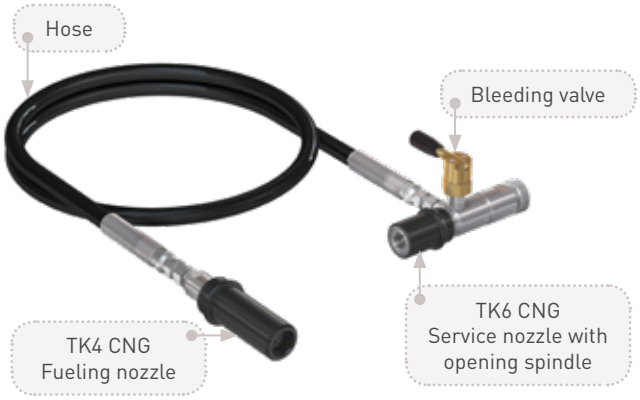

Features

- For bi-fueled service vehicles in order to refuel a broken down CNG car
- TZ21 CNG emergency fueling set consists of:
  - 1 type TK4 CNG fueling nozzle (C1-15459) without gas recirculation
  - 1 type TK6 CNG service nozzle (C1-111166) with opening spindle and integrated bleeding valve
  - 1 hose, length 3 m to 5 m
  - Fittings
- Only suitable for WEH® TN1 CNG receptacles (without a filter)

  The components for conversion of the service vehicle are NOT included in this fueling set!

A bi-fueled (CNG and petrol) vehicle is equipped with a bypass with ball valve. Its manual operation circumvents the internal check valve in front of the pressure vessel (natural gas tank). This subsequent conversion can be effected without problems by any vehicle converter. The CNG tank of the service vehicle will be refueled at the CNG fueling station. The service vehicle running for this purpose on petrol, drives to the broken down mono-fueled vehicle. The broken down vehicle can be refueled locally using the WEH® TZ21 CNG emergency fueling set.

The TK6 CNG service nozzle is placed onto the receptacle of the service vehicle. The TK4 CNG fueling nozzle is connected to the broken down vehicle. Both vehicles are connected with a hose to each other. By rotating the opening spindle at the TK6 CNG service nozzle the check valve of the WEH® TN1 CNG receptacle opens. The ball valve at the bypass of the service vehicle is opened slowly. At the TK4 CNG fueling nozzle the natural gas is lead into the empty tank. After refueling the ball valve at the bypass of the service vehicle is closed. The opening spindle of the TK6 CNG service nozzle is rotated back and the check valve of the WEH® TN1 CNG receptacle is closed. Then the integrated bleeding valve at the TK6 CNG vents the TZ21 CNG emergency fueling set. The TK6 CNG service nozzle and the TK4 CNG fueling nozzle can be removed.
Now the monofueled CNG vehicle can drive away with a refueled CNG tank.

Note
A WEH® TN1 CNG receptacle (without a filter) has to be installed at the service vehicle for proper function.

Application
Emergency fueling set for refueling cars from a service vehicle.
Only to be used by specially trained service personnel. Not for self-service operation!

TECHNICAL DATA

Characteristic	Basic version	Options
Nominal bore DN	6 mm	
Pressure range	B200 acc. to ISO 14469-1 (P30 acc. to ANSI NGV1) PN = 200 bar (3,000 psi) | PS = 300 bar | PT = 450 bar	
Temperature range	-40 °F up to +185 °F	On request
Material	Corrosion resistant	On request
Sealing material	Natural gas compatible	On request
Design	TK4 CNG without gas recirculation, TK6 CNG with opening spindle and integrated bleeding valve, hose: length 3 m / 5 m	On request

Ordering

ORDERING | Emergency fueling set TZ21 CNG

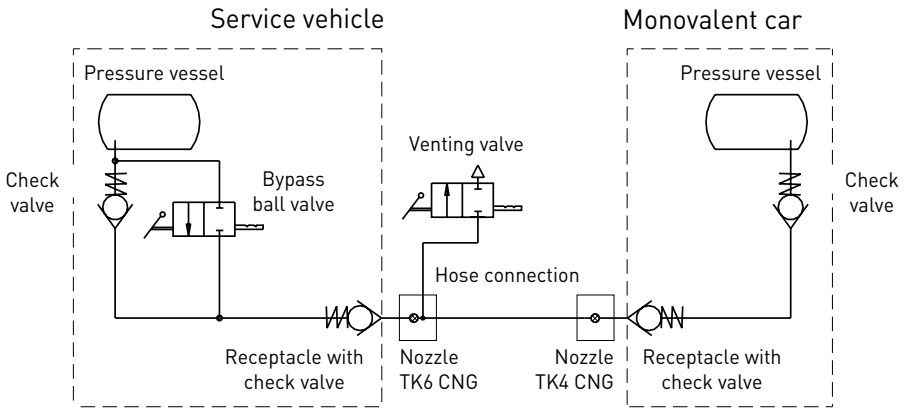

Part No.	Description	Pressure (PN)
C1-109088	TZ21 CNG (hose 3 m)	3,000 psi
C1-109089	TZ21 CNG (hose 5 m)	3,000 psi

ACCESSORIES

The following accessories are available for type TZ21 CNG:

Bypass

Bypass set for installation at the service vehicle, consisting of a 2-way ball valve and a TVR1 CNG check valve.

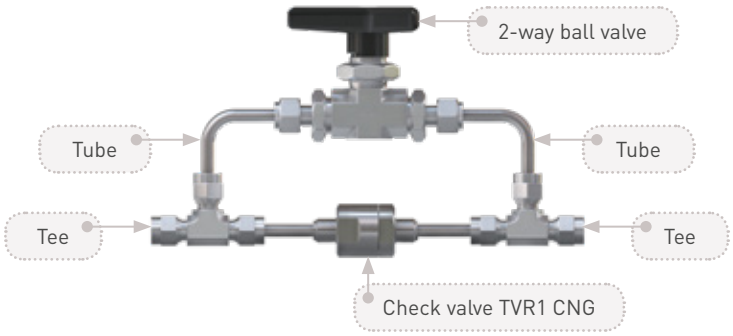

Part No.	Description
C1-32047	Bypass set for TZ21 CNG with tube connection Ø 6 mm

Spare parts

Various parts are available as spares for type TZ21 CNG:

Part No.	Description
C1-127959	Spare parts set TK4 CNG 3,000 psi (black sliding sleeve incl. metal sleeve and circlip)
E99-44923	Maintenance spray

Other products

OTHER PRODUCTS

You will find more products in our current catalog no. 15

Further information on our homepage
www.weh.com

Abbreviations/Definition
*Explanation of abbreviations see technical appendix in the catalogue or **www.weh.com***

Safe product selection
Our WEH® Products are designed to be operated by qualified professional users (insofar as WEH® Products are also designed to be operated by other users in individual cases, this is explicitly stated in the corresponding operating instructions). You alone are responsible for the selection of WEH® Products and their configuration according to the requirements of your system. In doing so, please particularly consider your intended use, your performance data, your material compatibility, your system concept and your system limits as well as your technical and legal requirements for operation, handling and maintenance. The quality and safety of WEH® Products is our highest priority. For this reason, WEH® Products may not be used outside the specifications in the relevant data sheets and product descriptions. We also strongly recommend that you refrain from using third-party spare parts or a combination of WEH® Products with unsuitable third-party products. You alone are responsible for reviewing the suitability of third-party products. WEH® Products and WEH® Spare parts comply with our quality and safety standards.

Explanation on the Pressure Equipment Directive
These WEH® Products are generally and exclusively classified as pressure accessories for piping in accordance with Article 2 (5) of the Pressure Equipment Directive 2014/68/EU. These WEH® Products may not be used (i) as safety accessories or (ii) for vessels as defined by the Pressure Equipment Directive 2014/68/EU. Therefore, the application of these WEH® Products must comply with their classification as pressure accessories for piping. The assessment with regard to a different classification can, however, be made on request.

External change management
WEH reserves the right to update, optimise and adjust its products continuously. This may result in corresponding changes of the product. Customers will be informed proactively or unsolicited by WEH only in individual cases about product updates, product optimisations and/or product adaptations that have been carried out. You are free to contact WEH at any time to request information about any product updates, product optimisations and/or product adjustments.

© All rights reserved, WEH GmbH. Any unauthorized use is strictly forbidden. Subject to alteration.
No liability will be assumed for any content. Herewith previous versions are no longer valid.

» Contact

For queries and further information, please do not hesitate to contact us.

Manufacturer:

WEH GmbH Gas Technology
Josef-Henle-Str. 1
89257 Illertissen / Germany

Phone: +49 7303 95190-0
Fax: +49 7303 95190-9999

Email: ngvsales@weh.com
www.weh.com

Distributor US:

WEH Technologies Inc.
24903 Laguna Edge Drive
Katy, TX 77494 / USA

Phone: +1 832 331 0021
Fax: +1 281 712 2664

Email: sales@weh.us
www.weh.us